DAWSON DOWNIE LAMONT LTD

HORIZONTAL TRIPLEX PLUNGER PUMPS

SP87 SERIES

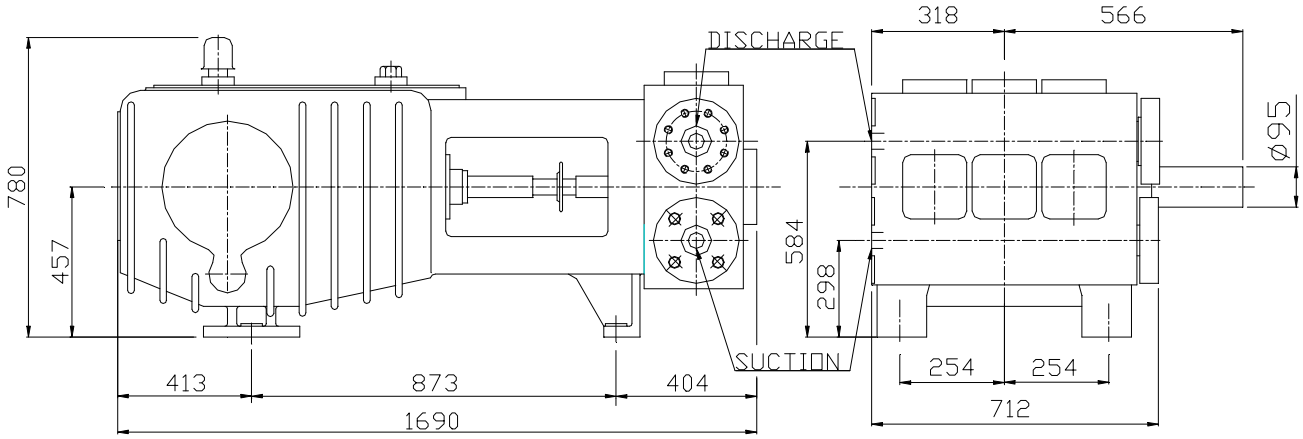

NOTE: - ALL DIMENSIONS SHOWN IN MILLIMETERS AND ARE GUIDELINES ONLY

The SP87 is a high performance 4” stroke horizontal triplex plunger pump designed to API 674, designed for high pressure ratings at medium to high flow applications. It is available in twelve plunger sizes resulting in a wide performance range as shown in the table below. Force feed lubrication is incorporated within the power frame to ensure adequate lubrication of power end components when operated under high plunger load.

The SP87 is driven by an electric motor through a gearbox or belts and pulleys. The motor can be mounted above the power frame making it ideal for restricted space applications.

The fluid end components are available in a selection of materials to ensure compatibility with the pumping medium.

RAM DIA.	MAXIMUM PRESSURE	PUMP SPEED (R.P.M)					
		96	116	145	194	290	350
INCHES	BARG	OUTPUT M^3/HR					
1.25	551	1.39	1.68	2.10	2.81	4.20	5.07
1.50	487	2.00	2.42	3.02	4.05	6.05	7.30
1.75	358	2.72	3.30	4.11	5.51	8.23	9.94
2.00	274	3.56	4.30	5.38	7.20	10.75	12.98
2.25	216	4.51	5.44	6.81	9.11	13.61	16.43
2.50	175	5.56	6.72	8.40	11.24	16.80	20.28
2.75	145	6.73	8.13	10.17	13.60	20.34	24.52
3.00	121	8.01	9.68	12.10	16.19	24.20	29.21
3.25	103	9.40	11.36	14.20	19.00	28.39	34.28
3.50	89	10.90	13.17	16.47	22.03	32.94	39.75
3.75	78	12.52	15.13	18.91	25.31	37.82	45.64
4.00	68	14.78	17.20	21.50	28.77	43.00	51.88

Displacement figures are based on water at ambient temperature and calculated at 100% Volumetric Efficiency.

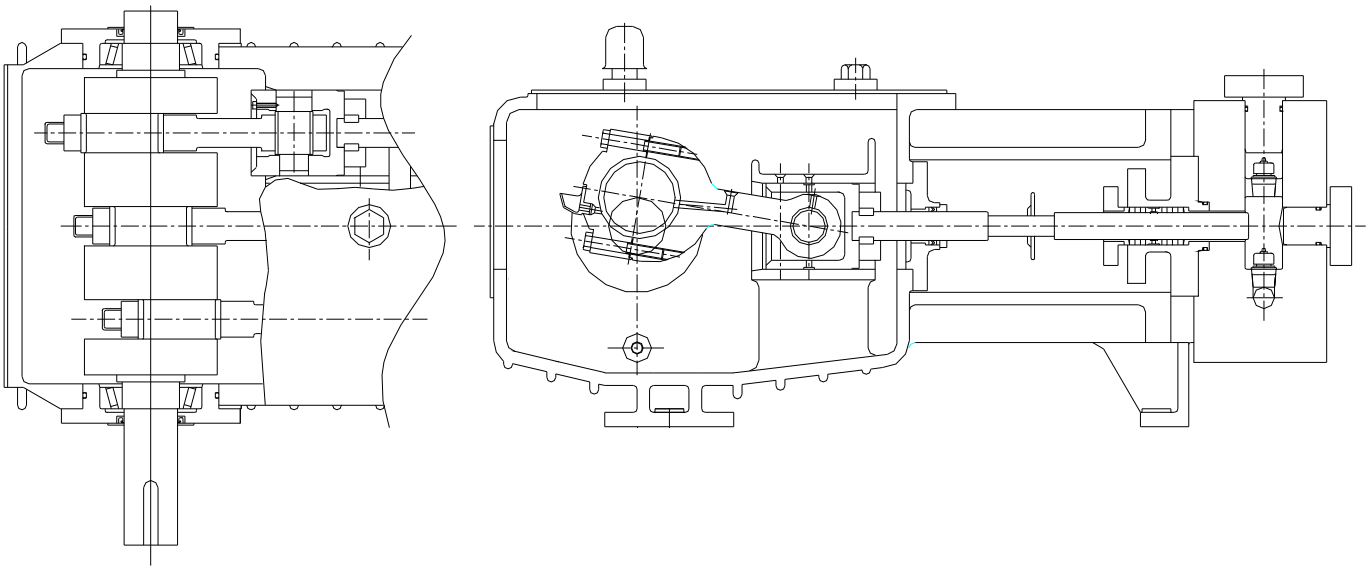

MATERIAL OPTIONS

- Fluid end- Available in carbon steel or stainless steel.
- Plungers- Available in Colmonoy or chrome coated stainless steel.
- Valves- Available with disc or wing guided type.
- Crankcase- High grade Cast Iron.

DESIGN FEATURES

- Force-feed lubrication for high-pressure applications.
- Crankshaft in high tensile steel with drive extension available from either side of power frame.
- Heavy Duty taper roller Main Bearings rated for continuous duty at maximum design load.
- Suction and discharge flanges to suit customers preferred rating.
- Handing of flanges to suit customers pipe work.
- Lightweight disc valves used for low suction pressure/NPSH duty conditions.
- Polyurethane inserted stainless steel valves for highly abrasive duty applications.
- Water-cooled stuffing box to suit high temperature fluids.

Dawson Downie Lamont
Unit 31 Rutherford Road
Southfield Industrial Estate
Glenrothes
Fife
KY6 2RT
United Kingdom

TEL: - (+44) 01592 775577
FAX: - (+44) 01592 775517
WEB SITE: - http://www.ddl-ltd.com
E-mail: - sales@ddl-ltd.com