DAWSON DOWNIE LAMONT

HORIZONTAL TRIPLEX PLUNGER PUMPS

SP903 SERIES

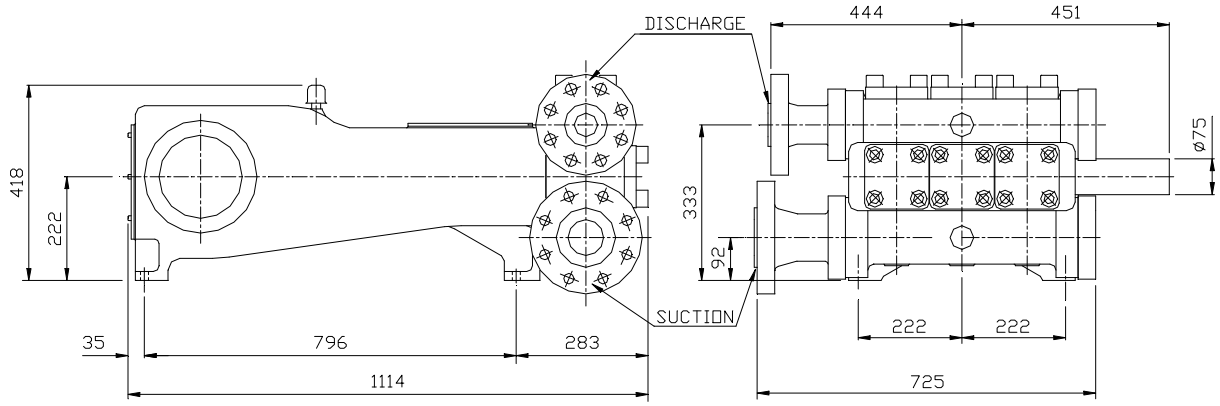

NOTE: - ALL DIMENSIONS SHOWN IN MILLIMETERS AND ARE GUIDELINES ONLY

The SP903 is a compact high performance 3 ½ ” stroke horizontal triplex plunger pump designed to API 674, ideally suited for high pressure medium flow applications. It is available in fourteen plunger sizes resulting in a wide performance range as shown in the table below.

The SP903 is driven by an electric motor through a gearbox or belts and pulleys. The motor can be mounted above the power frame making it ideal for restricted space applications.

The fluid end components are available in a selection of materials to ensure compatibility with the pumping medium.

CAST FLUID END

RAM DIA.	MAXIMUM PRESSURE	PUMP SPEED (R.P.M)						
		100	150	200	250	300	350	400
INCHES	BARG	OUTPUT M^3/HR						
3.000	83	7.36	10.90	14.70	18.26	21.80	-	-
2.875	90	6.81	10.08	13.35	16.62	20.16	-	-
2.750	99	5.99	9.26	12.26	15.26	18.26	21.53	-
2.625	105	5.45	8.45	11.17	13.90	16.62	19.62	-
2.500	120	4.90	7.63	10.08	12.53	15.26	17.71	20.16
2.375	132	4.63	6.81	9.26	11.44	13.62	16.08	18.26
2.250	147	4.09	5.99	8.17	10.08	12.26	14.17	16.35
2.125	165	3.54	5.45	7.36	8.99	10.90	12.81	14.71
2.000	186	3.27	4.90	6.54	8.17	9.81	11.44	12.81
1.875	197	2.72	4.36	5.72	7.08	8.45	9.81	11.44
1.750	197	2.18	3.27	4.09	5.18	6.27	7.36	8.45

FORGED FLUID END

1.500	330	1.83	2.74	3.66	4.57	5.49	6.40	7.31
1.250	475	1.27	1.90	2.54	3.18	3.81	4.45	5.08
1.000	740	0.81	1.22	1.63	2.04	2.45	2.86	3.26

Displacement figures are based on water at ambient temperature and calculated at 100% Volumetric Efficiency.

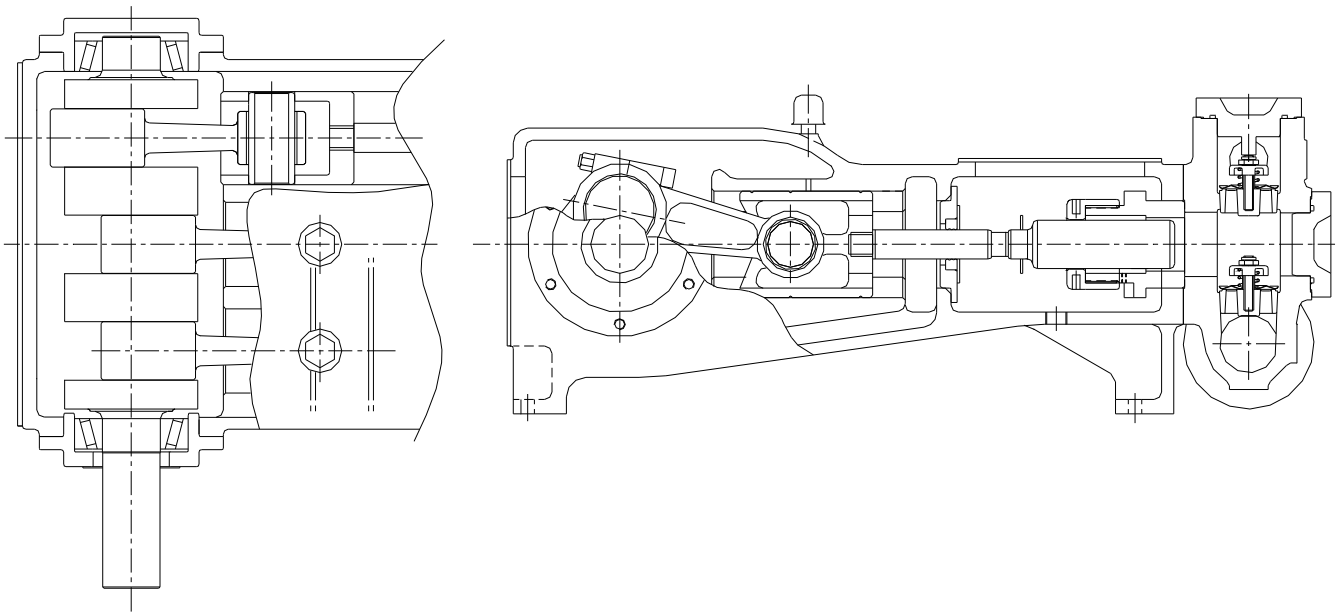

MATERIAL OPTIONS

- Fluid end- Available in Carbon steel, stainless steel or aluminium bronze.
- Plungers- Available in Ceramic, Colmonoy or chrome coated stainless steel.
- Valves- Available with disc or wing guided type.
- Crankcase- High grade Cast Iron.

DESIGN FEATURES

- Totally enclosed power frame incorporating splash-feed lubrication.
- Crankshaft in high tensile steel with drive extension available from either side of power frame.
- Heavy Duty taper roller Main Bearings rated for continuous duty at maximum design load.
- Suction and discharge flanges to suit customers preferred rating.
- Handing of flanges to suit customers pipe work.
- Lightweight disc valves used for low suction pressure/NPSH duty conditions.
- Polyurethane inserted stainless steel valves for highly abrasive duty applications.
- Two piece plunger and pony rod assembly for easy maintenance.
- Plungers fully interchangeable to facilitate future up-rating of pump at minimum cost.
- Plunger packing easily replaced without the need to remove the fluid end.

Dawson Downie Lamont
Unit 31 Rutherford Road
Southfield Industrial Estate
Glenrothes
Fife
KY6 2RT
United Kingdom

TEL: - (+44) 01592 775577
FAX: - (+44) 01592 775517
WEB SITE: - http://www.ddl-ltd.com
E-mail: - sales@ddl-ltd.com